Proc. Natl. Acad. Sci. USA
Vol. 90, pp. 8673–8677, September 1993
Biochemistry

Restoration of correct splicing in thalassemic pre-mRNA by antisense oligonucleotides

ZBIGNIEW DOMINSKI AND RYSZARD KOLE*

Department of Pharmacology and Lineberger Comprehensive Cancer Center, University of North Carolina, Chapel Hill, NC 27599

Communicated by Sidney Altman, June 10, 1993 (received for review April 22, 1993)

ABSTRACT **Antisense 2′-*O*-methylribooligonucleotides were targeted against specific sequence elements in mutated human β-globin pre-mRNAs to restore correct splicing of these RNAs *in vitro*. The following mutations of the β-globin gene, A → G at nt 110 of the first intron (β^{110}), T → G at nt 705 and C → T at nt 654 of the second intron ($IVS2^{705}$ and $IVS2^{654}$, respectively), which led to aberrant splicing of the corresponding pre-mRNAs, were previously identified as the underlying causes of β-thalassemia. Aberrant splicing of β^{110} pre-mRNA was efficiently reversed by an oligonucleotide targeted against the branch point sequence in the first intron of the pre-mRNA but not by an oligonucleotide targeted against the aberrant 3′ splice site. In both $IVS2^{705}$ and $IVS2^{654}$ pre-mRNAs, correct splicing was restored by oligonucleotides targeted against the aberrant 5′ splice sites created by the mutations in the second intron or against a cryptic 3′ splice site located upstream and activated in the mutated background. These experiments represent an approach in which antisense oligonucleotides are used to restore the function of a defective gene and not, as usual, to down-regulate the expression of an undesirable gene.**

The potential of oligonucleotides as modulators of gene expression and as chemotherapeutic agents is currently under intense investigation. Rapidly accumulating literature has been surveyed in a number of recent reviews (1–4). The activity of antisense oligonucleotides generally relies on their hybridization with targeted RNA, leading either to its degradation by cellular RNase H or to a block in its translation (1–4). In another approach, so-called antigene oligonucleotides are directed against specific regions in DNA, where they form triplex structures and inhibit transcription by RNA polymerase II (5, 6). Both antisense and antigene oligonucleotides lead to down-regulation of targeted genes and are applied to reduce the intracellular level of undesirable gene products coded by viruses (7, 8), other pathogens (9), or oncogenes (2). This is difficult to accomplish, especially if the targeted gene codes for a protein that is stable and has a low turnover rate.

In the approach reported here, antisense oligonucleotides are designed to generate a correct gene product that had been rendered defective by mutations that changed the splicing pattern of the corresponding pre-mRNA. We have used oligonucleotides complementary to specific sequence elements in pre-mRNAs coded by mutated β-globin alleles identified in various cases of β-thalassemia. In this model system of potential clinical significance (10), the oligonucleotides suppressed aberrant splicing pattern of β-globin pre-mRNA resulting from gene mutations and restored correct splicing.

MATERIALS AND METHODS

All pre-mRNAs were transcribed by SP6 RNA polymerase (11) from appropriate fragments of the human β-globin gene subcloned into the SP64 vector. HBΔ6 (12) contains the whole human β-globin gene, consisting of three exons and two introns. The β^{110} construct, carrying an A → G mutation at position 110 of the first intron, was obtained by subcloning a fragment from the original thalassemic clone (ref. 13; P. J. Furdon and R.K., unpublished data) into HBΔ6 plasmid. To construct clones containing thalassemic mutations in the second intron, a fragment of human β-globin gene containing virtually the entire second exon, the entire second intron, and a major portion of the third exon was subcloned into the SP64 vector. The resulting IVS2 clone was subsequently subjected to site-specific mutagenesis (14). A mutation of T → G at nt 705 of the intron was introduced to construct the $IVS2^{705}$ clone, and a C → T mutation was introduced at nucleotide 654 to construct the $IVS2^{654}$ clone. Further details of the construction are available upon request. Transcription was carried out on a plasmid linearized at the *Bam*HI site for the β^{110} clone or at the *Pvu* II site for the $IVS2^{705}$ and $IVS2^{654}$ clones.

The oligonucleotides were synthesized at the Lineberger Comprehensive Cancer Center using reagents from Glen Research (Sterling, VA) and purified using SurePure kit (United States Biochemical). The concentration of the oligonucleotides was measured spectrophotometrically at 260 nm. The sequence of the oligonucleotides is shown in Fig. 1*B*.

Nuclear extract from HeLa cells was prepared as described (12) except that the pellet of the nuclei was initially suspended in 0.5 vol of buffer C [20 mM Hepes, pH 7.9/25% (wt/vol) glycerol, 1.5 mM $MgCl_2$/0.2 mM EDTA/0.5 mM dithiothreitol/20 mM KCl] and subsequently supplemented with another 0.5 vol of buffer C containing 1.2 M KCl. Splicing of ^{32}P-labeled pre-mRNAs ($\approx 10^5$ cpm per reaction, 25 fmol) was carried out in the nuclear extract for 2 hr at 30°C in a reaction volume of 25 μl (12, 15). Antisense oligonucleotides were added together with the other components of the splicing reaction. Reaction products were analyzed on an 8% polyacrylamide sequencing gel and visualized by autoradiography.

All autoradiograms were captured by a Dage–MTI CCD-72 video camera (Michigan City, IN), and the images were processed using National Institutes of Health IMAGE 1.43 and MACDRAW PRO 1.0 software. The final figures were printed out on Sony dye sublimation printer.

RESULTS AND DISCUSSION

Restoration of Correct Splicing in Intron 1 of Human β-Globin Pre-mRNA. In β^{110}-thalassemia, a form of the disease predominant in thalassemic individuals of Greek and Cypriot origin (10, 16), an A → G mutation at nt 110 of the first intron of the human β-globin gene creates an additional, aberrant 3′ splice site (13). In spite of the presence of the normal 3′ splice site, the aberrant site is preferentially used by the splicing machinery, resulting in an incorrectly spliced mRNA that contains 19 nt of the intron sequence (Fig. 1). In cells transfected with the β^{110}-globin allele, correctly spliced mRNA constitutes only about 10% of the spliced product (17,

The publication costs of this article were defrayed in part by page charge payment. This article must therefore be hereby marked "*advertisement*" in accordance with 18 U.S.C. §1734 solely to indicate this fact.

*To whom reprint requests should be addressed.

18), in agreement with the markedly reduced levels of normal hemoglobin observed in patients with this form of thalassemia (10). It was found that in β^{110} pre-mRNA the aberrant 3′ splice site utilizes the normal branch point at nt 93 of the intron, competing with the correct 3′ splice site and thereby reducing correct splicing (19). Significantly for this work, mutations inactivating this element activate a cryptic branch point at nt 107 and result in splicing at the correct 3′ splice site (20). Aberrant splicing cannot proceed in the mutated background due to the proximity of the 3′ splice site at position 110 to the cryptic branch point. We therefore reasoned that antisense oligonucleotides complementary to the normal branch point sequence will, like mutations, block its function in splicing and force the splicing machinery to select the cryptic branch point, generating correctly spliced mRNA.

To test this idea, a 14-mer 2′-*O*-methyloligonucleotide (oligonucleotide 1, Fig. 1) was targeted against the branch point sequence in intron 1 of β-globin pre-mRNA. The branch point nucleotide is located at position 94 of the intron, and the oligonucleotide spans positions 82–95. The 2′-*O*-methyloligonucleotides were selected for this and subsequent experiments because they are resistant to nucleases and form stable hybrids with RNA that are not degraded by RNase H (21–23). Degradation by RNase H, seen when antisense oligodeoxynucleotides or their phosphorothioate derivatives are used (1–4), would destroy the substrate pre-mRNA and prevent splicing. The oligonucleotides were added to an *in vitro* splicing reaction containing ^{32}P-labeled pre-mRNA (≈25 fmol, 0.5 nM) and a nuclear extract from HeLa cells. Analysis of splicing of β^{110} pre-mRNA by polyacrylamide gel electrophoresis shows that, consistent with a previous report (19), in the control reaction without the oligonucleotide (Fig. 2, lane 2) the ratio of the incorrectly to correctly spliced products is ≈9:1. Addition of oligonucleotide 1 at 0.05–5 μM concentrations causes dose-dependent inhibition of aberrant splicing and induction of correct splicing of the substrate (Fig. 2, lanes 3–6). At a concentration of 5 μM, oligonucleotide 1 reverses the ratio of the incorrectly to correctly spliced products to 1:5. Apparently, oligonucleotide 1 hybridizes to the normal branch point and prevents binding of the splicing factors to this sequence element, forcing them to select the cryptic branch point downstream. The effect of oligonucleotide 1 must be sequence specific, since it is unlikely that its hybridization with any other site on the pre-mRNA would promote the observed results (see below). Sequence specificity of oligonucleotide 1 is further demon-

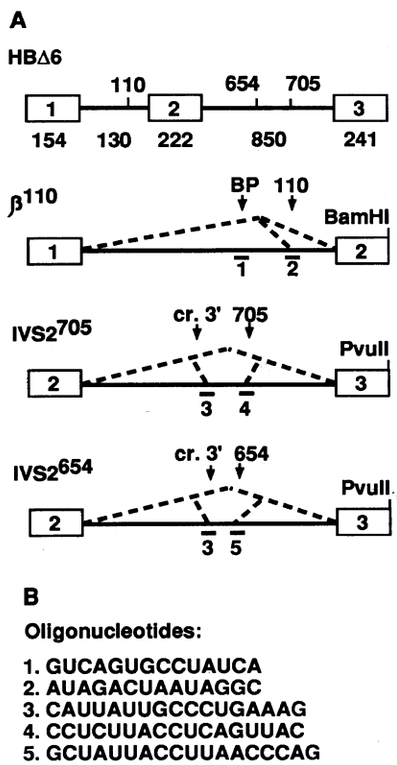

FIG. 1. (*A*) Structure of pre-mRNAs. Boxes indicate exons; heavy lines indicate introns. Positions of the mutations (110 or 654 and 705) relative to nt 1 of intron 1 and intron 2, respectively, are shown above the HBΔ6 clone. Numbers below indicate the length, in nucleotides, of exons and introns. Antisense oligonucleotides are indicated by the numbered short bars below β^{110}, IVS2^{654}, and IVS2^{705} constructs, and splicing pathways are indicated by the dashed lines. (*B*) Sequence of antisense 2′-*O*-methyloligoribonucleotides. Oligonucleotide 1, complementary to nt 82–95 of intron 1, is targeted against the normal branch point (BP); oligonucleotide 2 (nt 103–116) is targeted against the aberrant 3′ splice site created by β^{110} mutation in intron 1 of the β-globin gene. Oligonucleotide 3, complementary to nt 573–589 of intron 2, is targeted against the cryptic 3′ (cr. 3′) splice site at nt 579 of the second intron; oligonucleotide 4 (nt 697–713) is targeted against the aberrant 5′ splice site created by the mutation at nt 705 in the second intron of IVS2^{705} pre-mRNA; oligonucleotide 5 (nt 643–660) is targeted against the aberrant 5′ splice site created by the mutation at nt 654 in the second intron of IVS2^{654} pre-mRNA.

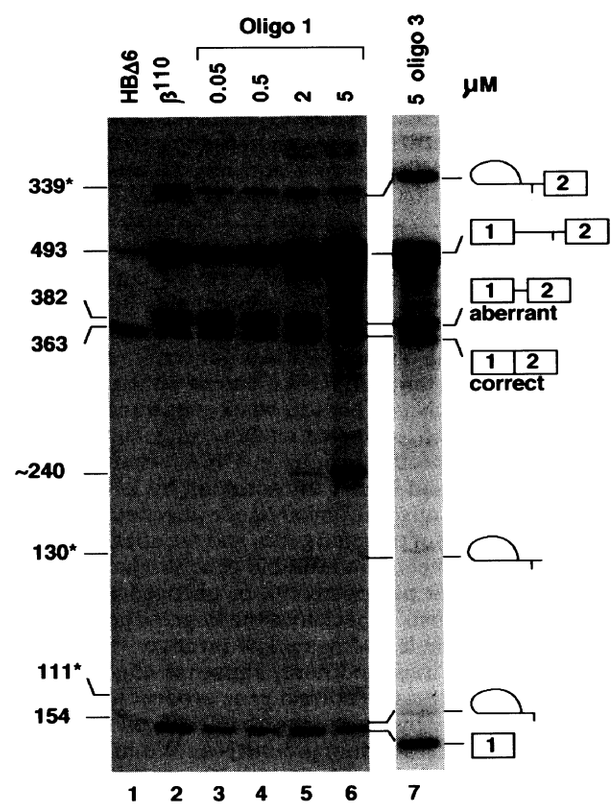

FIG. 2. Reversal of aberrant splicing by oligonucleotide 1 directed against the normal branch point in intron 1 of β-globin pre-mRNA. In this and subsequent experiments, *in vitro* splicing was carried out as described in *Materials and Methods*. Reaction products were analyzed on an 8% polyacrylamide sequencing gel and visualized by autoradiography. The structure of the products and intermediates is depicted on the right; their size in nucleotides is shown on the left. An asterisk denotes aberrant mobility of lariat-containing intermediates. The same designations are used in subsequent figures. Lane 1, splicing of control HBΔ6 pre-mRNA. Lane 2, splicing of β^{110} pre-mRNA. Lanes 3–6, splicing of β^{110} pre-mRNA in the presence of increasing concentrations (μM; indicated at the top of the figure) of oligonucleotide 1. Lane 7, splicing of β^{110} pre-mRNA in the presence of oligonucleotide 3, targeted to a sequence in intron 2 of β-globin pre-mRNA.

strated by the fact that at 5 μM an oligonucleotide targeted against the cryptic 3′ splice site in the second intron of the β-globin gene (oligonucleotide 3, Fig. 1; see also below) does not affect the original ratio of the spliced products (Fig. 2, lane 7). At higher concentrations (10–20 μM), oligonucleotide 1 inhibits splicing in an unspecific manner and generates greater amounts of an ≈240-nt RNA species, which is detectable in small quantities at a 5 μM concentration of oligonucleotide 1 (Fig. 2, lane 6). This product accumulates only in the presence of ATP and other components of the splicing mixture, and its length is consistent with cleavage of the RNA at the site of hybridization with the oligonucleotide. These results suggest the presence of an ATP-dependent nuclease that either recognizes RNA–2′-*O*-methyloligonucleotide duplexes and cleaves the RNA in an endonucleolytic manner or degrades RNA exonucleolytically and is blocked at the site of duplex formation.

The aberrant 3′ splice site generated by the β^{110} mutation at position 111 appears to be an obvious target for reversal of aberrant splicing by an antisense oligonucleotide. Blocking this sequence element should be the simplest way of forcing the splicing machinery to use the original 3′ splice site at the end of the intron. However, a 14-mer (oligonucleotide 2, Fig. 1) directed against the aberrant splice site, spanning nt 103–116 in the intron, was not effective; at increasing concentrations of oligonucleotide 2, accumulation of both spliced products was inhibited; the correct one was inhibited somewhat more efficiently (Fig. 3, lanes 2–5). Interestingly, the first step of the splicing reaction, cleavage at the 5′ splice site and formation of the lariat–exon intermediate, seems to be less affected by oligonucleotide 2 than the formation of the final spliced product. This is shown by the presence of the intermediates generated during this step even at 5 and 10 μM concentrations of oligonucleotide 2 (Fig. 3, lanes 5 and 6). At higher concentrations of the oligonucleotide, cleavage at the 5′ splice site was also inhibited (data not shown).

The lack of success with oligonucleotide 2 may result from the proximity of the aberrant and correct 3′ splice sites and, in consequence, the concomitant interference of this oligonucleotide with both splicing pathways. Note that in β^{110} pre-mRNA the sequence elements important for splicing (i.e., the two 3′ splice sites, two branch point elements, and the polypyrimidine tract) are located within the stretch of 37 nt. Conceivably, hybridization of oligonucleotide 2 in the middle of this region interferes with binding of a large number of splicing factors assembling there and prevents any splicing by steric hindrance. Consistent with this idea, additional experiments showed that any oligonucleotide targeted downstream from the normal branch point and upstream from the correct 3′ splice site inhibited splicing without restoring the correct pathway (results not shown). Note also that oligonucleotide 2, as well as some other oligonucleotides targeted to this region, block a significant portion of the polypyrimidine tract, which is essential for splicing.

Restoration of Correct Splicing in Intron 2 of the Human β-Globin Gene. Whether an aberrant 3′ splice site can nevertheless be used as a target for reversal of incorrect splicing was further tested on pre-mRNA carrying a T → G mutation at position 705 of the second intron of human β-globin gene. This rare mutation ($IVS2^{705}$), found in Mediterranean thalassemia patients (10, 16), creates an additional, aberrant 5′ splice site and activates a cryptic 3′ splice site at position 579 of the intron (24). The incorrect splicing pathway results in the removal of nt 1–578 and 706–850 as separate introns and incorporation of the remaining portion of the intron into the spliced product (Fig. 1). In $IVS2^{705}$ pre-mRNA the distances between each of the sequence elements involved in splicing exceed 100 nt, and no steric hindrance effects caused by the oligonucleotide would be expected.

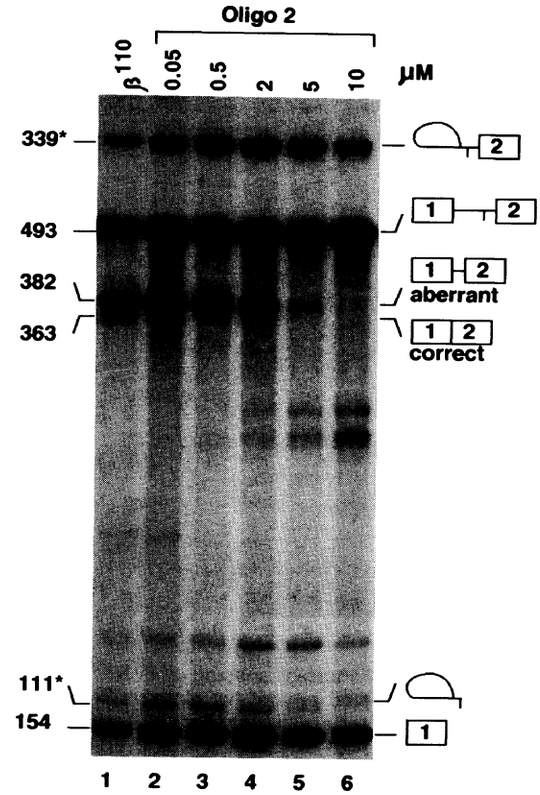

FIG. 3. Effects of oligonucleotide 2, directed against the aberrant 3′ splice site in intron 1 of β^{110} pre-mRNA. Lane 1, splicing of β^{110} pre-mRNA. Lanes 2–6, splicing of β^{110} pre-mRNA in the presence of increasing concentrations (μM; indicated at the top of the figure) of oligonucleotide 2.

The control transcript (IVS2) containing the second intron of normal β-globin pre-mRNA is spliced efficiently, generating the expected intermediates (the 5′ exon and the large lariats) and a 451-nt correctly spliced product (Fig. 4, lane 1). Note that the splicing of long transcripts and the removal of long introns have been difficult to achieve *in vitro*. The high efficiency of the reaction seen here and in the following experiment is probably due to the improvement in the preparation of the nuclear splicing extracts. Splicing of $IVS2^{705}$ pre-mRNA is also efficient and yields an additional spliced product 577 nt long as well as the expected 722- and 348-mer intermediates, resulting from the aberrant splicing pathway caused by the mutation (Fig. 4, lane 2). The 1:2 ratio of correctly to incorrectly spliced RNAs is similar to that observed *in vivo* (24). Oligonucleotide 3, spanning positions 573–589 of intron 2 (Fig. 1) and complementary to the activated cryptic 3′ splice site at nt 579, is very effective; it induces a dose-dependent reversal of splicing to the correct splicing pathway (Fig. 4, lanes 3–5). There is a significant accumulation of the correctly spliced product at a 0.12 μM concentration of the oligonucleotide (Fig. 4, lane 3); at 0.5 and 2 μM the restoration of correct splicing is virtually complete. Correct splicing is also completely restored at similar concentrations of oligonucleotide 4 (Fig. 1), spanning positions 697–713 of the intron and targeted against the aberrant 5′ splice site created by the mutation at nt 705 (Fig. 4, lanes 6–8). At higher concentrations of this oligonucleotide (5 and 10 μM), correct splicing remains very efficient; however, at 20 μM, unspecific inhibition of splicing occurred. A control experiment, in which splicing of IVS^{705} pre-mRNA is carried out in the presence of 5 μM oligonucleotide 1, shows no effect on the ratio of correctly to incorrectly spliced

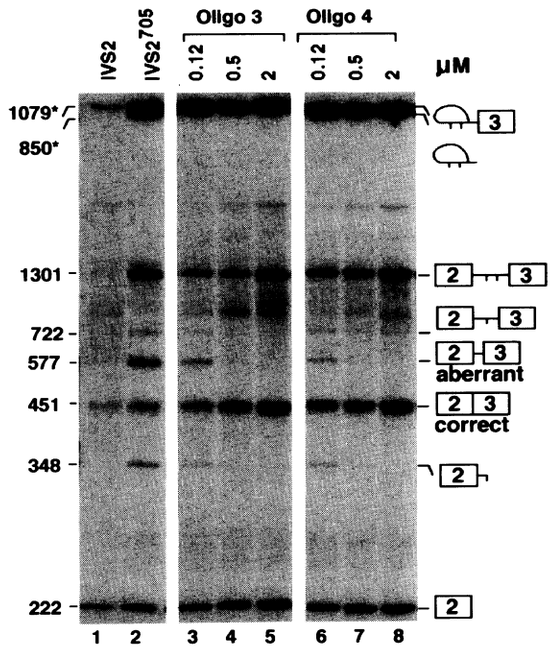

FIG. 4. Reversal of aberrant splicing of IVS2^{705} pre-mRNA by oligonucleotide 3, directed against the aberrant 3′ splice site, and oligonucleotide 4, directed against the aberrant 5′ splice site in intron 2 of the IVS2^{705} pre-mRNA. Lanes 1 and 2, splicing of control transcripts (indicated at the top of the figure). Lanes 3–5 and 6–8, splicing of IVS2^{705} pre-mRNA in the presence of oligonucleotide 3 and oligonucleotide 4, respectively. The concentrations of the oligonucleotides in the reaction (μM) are indicated at the top of the figure. The band at the top of the gel contains unresolved intermediates and products containing large lariats. The numbers 1079 and 850 represent the number of nucleotides in the lariat and lariat–exon generated by the correct splicing pathway. The RNA band at 722 nt contains an intermediate of the aberrant splicing pathway with the upstream, aberrant intron already removed. After cleavage at the aberrant 5′ splice site, its size is reduced to 348 nt.

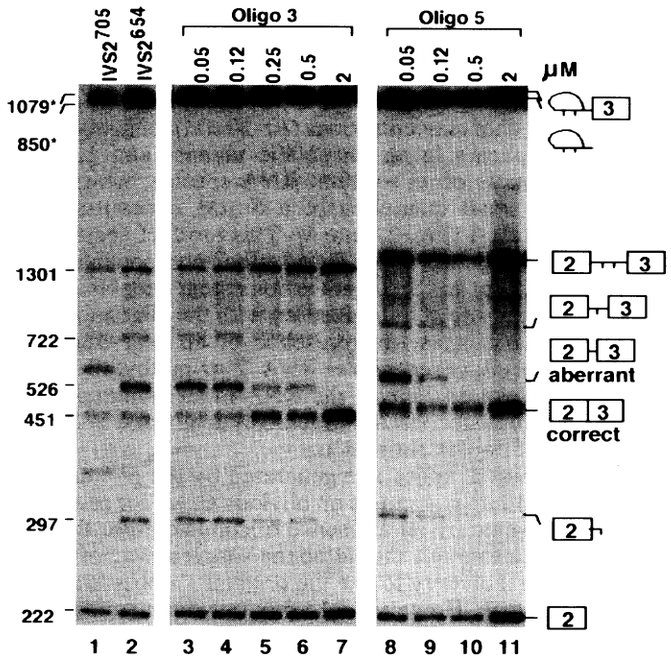

FIG. 5. Reversal of aberrant splicing of IVS2^{654} pre-mRNA by oligonucleotide 3, directed against the aberrant 3′ splice site, and oligonucleotide 5, directed against the aberrant 5′ splice site in intron 2 of the IVS2^{654} pre-mRNA. Lanes 1 and 2, splicing of control transcripts (indicated at the top of the figure). Lanes 3–7 and 8–11, splicing of IVS2^{654} pre-mRNA in the presence of oligonucleotide 3 and oligonucleotide 5, respectively. The concentrations of the oligonucleotides in the reaction (μM) are indicated at the top of the figure. Other symbols are as described in the legends to the previous figures.

products (data not shown). This is further evidence of the high specificity of oligonucleotides used in these studies.

The IVS2^{654} mutation (25), frequently identified in thalassemic individuals of Chinese origin (16), affects splicing via a mechanism analogous to that operating in the IVS^{705} mutant—i.e., by creating an additional 5′ splice site at nt 653 and activating the common cryptic 3′ splice site at nt 579 of intron 2. Splicing patterns of both mutated pre-mRNAs are presented side by side in Fig. 5, lanes 1 and 2. Different lengths of incorrectly spliced products and of some of the intermediates reflect the different positions of aberrant 5′ splice sites in IVS2^{654} and IVS^{705} mutants. The efficiency of aberrant splicing of IVS2^{654} pre-mRNA is higher than that for IVS2^{705} pre-mRNA, and only small amounts of correctly spliced product, relative to the aberrant one, are detectable during splicing *in vitro* (Fig. 5, lane 2). In spite of the high efficiency of aberrant splicing, oligonucleotide 3, targeted against the cryptic 3′ splice site, as well as oligonucleotide 5, spanning nt 643–660 and targeted against the aberrant 5′ splice site (Fig. 1), restored correct splicing efficiently at concentrations similar to those used in the preceding experiment (Fig. 4). At a 2 μM concentration of either oligonucleotide, the correctly spliced product accumulates, and the aberrant product is virtually undetectable (Fig. 5, lanes 7 and 11, respectively).

The results presented in Figs. 4 and 5 demonstrate that aberrant 3′ and 5′ splice sites provide suitable targets for specific reversal of incorrect splicing. Similar effects of oligonucleotides 3, 4, and 5 suggest that there are no major differences in their accessibilities to the target splice sites. All three oligonucleotides are several times more effective than oligonucleotide 1 used in the experiments shown in Fig. 2. The higher efficacy may be due to the fact that oligonucleotides 3–5 are 3 nt longer than oligonucleotide 1 and may form more stable hybrids with RNA. They also block aberrant splice sites, allowing the splicing machinery to use the correct splice sites and, presumably, the correct branch point. In contrast, in β^{110} pre-mRNA, oligonucleotide 1 forces the splicing machinery to use a suboptimal cryptic branch point sequence, which may result in relatively inefficient generation of correctly spliced mRNA.

In the experiments presented above, the oligonucleotides were added simultaneously with the other components of the splicing reaction. Prehybridization of the oligonucleotides with the pre-mRNA did not increase their efficiency, and oligonucleotides added 15 min after the start of the reaction [i.e., after splicing complexes had a chance to form (26)] were almost as effective (data not shown). These results indicate that oligonucleotides containing the 2′-*O*-methyl modification are able to compete effectively for their target sequences with the splicing factors. The high efficacy of these compounds is most likely due to their strong hybridization with RNA (21–23). In other experiments they also affected splice site selection and/or efficiently inhibited pre-mRNA splicing (27), whereas methylphosphonate oligonucleotides, which form less stable hybrids, were much less effective (ref. 28; P. J. Furdon and R.K., unpublished results).

The possibilities of alteration of splicing pathways by antisense oligonucleotides are not limited to the mutations tested above. Since it is estimated that up to 15% of all point mutations in genetic diseases results in defective splicing (29), the approach described here may have potentially wide application. Antisense oligonucleotides may be useful in restoration of correct splicing in other thalassemic mutations

(10) and in genetic disorders, such as Tay-Sachs syndrome (30), phenylketonuria (31), and certain forms of cystic fibrosis (32), in which mutations leading to aberrant splicing of pre-mRNA have been identified. They may also promote reactivation of cancer suppressor genes that are defective due to mutations affecting pre-mRNA splicing (33, 34).

It is of interest that oligonucleotide 3 was able to inhibit aberrant splicing caused by two different mutations. There are a number of thalassemic mutations that lead to activation of a single cryptic splice site in exon 1 of the human β-globin gene (10); therefore, it seems likely that aberrant splicing could be corrected with a single oligonucleotide complementary to this site. This property would be very useful if an antisense approach were applied for therapeutic purposes.

The next logical step in this approach is to demonstrate that oligonucleotides can efficiently modify splicing pathways *in vivo*. A number of studies showed that transmembrane transport of oligonucleotides is possible and can be significantly improved by various modifications of these compounds, affecting their chemical properties (1–4). Splice sites have been shown to provide effective targets for inhibition of gene expression by antisense oligonucleotides (35–37). A recent report indicates that the use of a lipofection procedure dramatically increases delivery of the oligonucleotides to the cells and leads to their increased accumulation in the nucleus, the site of splicing (38). These results suggest that the approach reported here will also be successful *in vivo*.

In this work the antisense oligonucleotides were used to generate correctly spliced mRNA from an aberrant pre-mRNA substrate *in vitro*. It is important to note that oligonucleotides 1 and 3 were able to elicit a desired effect by antisense interaction at sequences distant from the actual mutations. These results point to the usefulness of the *in vitro* splicing system for rapid screening of suitable target sequences, thus narrowing down the number of oligonucleotides worthy of *in vivo* testing.

We thank Elizabeth Smith for excellent technical assistance, Alan Novotny for the synthesis of 2′-*O*-methyloligonucleotides, and our colleagues for valuable comments on the manuscript. This work was supported in part by National Institutes of Health Grant GM32994 to R.K. and by the Cooley's Anemia Foundation postdoctoral fellowship to Z.D.

1. Ghosh, M. K. & Cohen, J. S. (1992) *Prog. Nucleic Acids Res. Mol. Biol.* **42**, 79–126.
2. Neckers, L., Whitsall, L., Rosolen, A. & Geselowitz, D. A. (1992) *Crit. Rev. Oncol.* **3**, 175–231.
3. Agrawal, S. (1992) *Trends Biotechnol.* **10**, 152–158.
4. Murray, J. A. H., ed. (1992) *Antisense RNA and DNA* (Liss, New York).
5. Maher, L. J., Wold, B. & Dervan, P. B. (1991) *Antisense Res. Dev.* **1**, 277–281.
6. Hanvey, J. C., Peffer, N. J., Bisi, J. E., Thomson, S. A., Cadilla, R., Josey, J. A., Ricca, D. J., Hassman, C. F., Bonham, M. A., Au, K. G., Carter, S. G., Bruckenstein, D. A., Boyd, A. L., Noble, S. A. & Babiss, L. E. (1992) *Science* **258**, 1481–1485.
7. Goodchild, J. (1991) *Antisense Res. Dev.* **1**, 361–364.
8. Degols, G., Leonetti, J. P., Milhaud, P., Mechti, N. & Lebleu, B. (1992) *Antiviral Res.* **17**, 279–287.
9. Rapaport, E., Misiura, K., Agrawal, S. & Zamecnik, P. (1992) *Proc. Natl. Acad. Sci. USA* **89**, 8577–8580.
10. Schwartz, E. & Benz, E. J. (1991) in *Hematology, Basic Principles and Practice*, eds. Hoffman, R., Benz, E. J., Shattil, S. J., Furie, B. & Cohen, H. J. (Churchill Livingstone, New York), pp. 368–392.
11. Konarska, M. M., Padgett, R. A. & Sharp, P. A. (1984) *Cell* **38**, 731–736.
12. Krainer, A. R., Maniatis, T., Ruskin, B. & Green, M. R. (1984) *Cell* **36**, 993–1005.
13. Spritz, R. A., Jagadeeswaran, P., Prabhakara, V., Choudary, P. V., Biro, P. A., Elder, J. T., DeRiel, J. K., Manley, J. L., Gefter, M. L., Forget, B. G. & Weissman, S. M. (1981) *Proc. Natl. Acad. Sci. USA* **78**, 2455–2457.
14. Kunkel, T. A., Roberts, J. D. & Zakour, R. A. (1987) *Methods Enzymol.* **154**, 367–382.
15. Dominski, Z. & Kole, R. (1992) *Mol. Cell. Biol.* **12**, 2108–2114.
16. Huisman, T. H. J. (1990) *Br. J. Hematol.* **75**, 454–457.
17. Busslinger, M. N., Moschonas, N. & Flavell, R. A. (1981) *Cell* **27**, 289–298.
18. Fukumaki, Y., Ghosh, P. K., Benz, E. J., Reddy, V. B., Lebovitz, P., Forget, B. G. & Weissman, S. M. (1982) *Cell* **28**, 585–593.
19. Reed, R. & Maniatis, T. (1985) *Cell* **41**, 95–105.
20. Zhuang, Y. & Weiner, A. M. (1989) *Genes Dev.* **3**, 1545–1552.
21. Inoue, H., Hayase, Y., Imura, A., Iwai, S., Miura, K. & Ohtsuka, E. (1987) *Nucleic Acids Res.* **15**, 6131–6148.
22. Inoue, H., Hayase, Y., Iwai, S. & Ohtsuka, E. (1987) *FEBS Lett.* **215**, 327–330.
23. Sproat, B. S., Lamond, A. I., Beijer, B., Neuner, P. & Ryder, U. (1989) *Nucleic Acids Res.* **17**, 3373–3381.
24. Dobkin, C. & Bank, A. (1985) *J. Biol. Chem.* **260**, 16332–16337.
25. Cheng, T.-c., Orkin, S. H., Antonarakis, S. E., Potter, M. J., Sexton, J. P., Markham, A. F., Giardina, P. J. V., Li, A. & Kazazian, H. H., Jr. (1984) *Proc. Natl. Acad. Sci. USA* **81**, 2821–2826.
26. Ruskin, B. & Green, M. (1985) *Cell* **43**, 13–139.
27. Mayeda, A., Hayase, Y., Inoue, H., Ohtsuka, E. & Oshima, Y. (1990) *J. Biochem. (Tokyo)* **108**, 399–405.
28. Kole, R., Shukla, R. R. & Akhtar, S. (1991) *Adv. Drug Del. Rev.* **6**, 271–286.
29. Krawczak, M., Reiss, J. & Cooper, D. N. (1992) *Hum. Genet.* **90**, 41–54.
30. Akli, S., Chelly, J., Mezard, C., Gandy, S., Kahn, A. & Poenaru, L. (1990) *J. Biol. Chem.* **265**, 7324–7330.
31. Dworniczak, B., Aulehla-Scholz, C., Kaladydjieva, L., Bartholome, K., Grudda, K. & Horst, J. (1991) *Genomics* **11**, 242–246.
32. Tsui, L.-C. (1989) *Trends Genet.* **8**, 392–395.
33. Sameshima, Y., Akiyama, T., Mori, N., Mizoguchi, H., Toyoshima, K., Sugimura, T., Terada, M. & Yokota, J. (1990) *Biochem. Biophys. Res. Commun.* **173**, 697–703.
34. Haber, D. A., Sohn, R. L., Buckler, A. J., Pelletier, J., Call, K. M. & Housman, D. E. (1991) *Proc. Natl. Acad. Sci. USA* **88**, 9618–9622.
35. Lisziewicz, J., Sun, D., Klotman, M., Agrawal, S., Zamecnik, P. & Gallo, R. (1992) *Proc. Natl. Acad. Sci. USA* **89**, 11209–11213.
36. Smith, C. C., Aurelian, L., Reddy, M., Miller, P. S. & Ts'o, P. O. P. (1986) *Proc. Natl. Acad. Sci. USA* **83**, 2787–2791.
37. Kulka, M., Smith, C. C., Aurelian, L., Fisheleivich, R., Meade, K., Miller, P. & Ts'o, P. O. P. (1989) *Proc. Natl. Acad. Sci. USA* **86**, 6868–6872.
38. Bennett, C. F., Chiang, M. Y., Chan, H., Shoemaker, J. E. & Mirabelli, C. K. (1992) *Mol. Pharmacol.* **41**, 1023–1033.